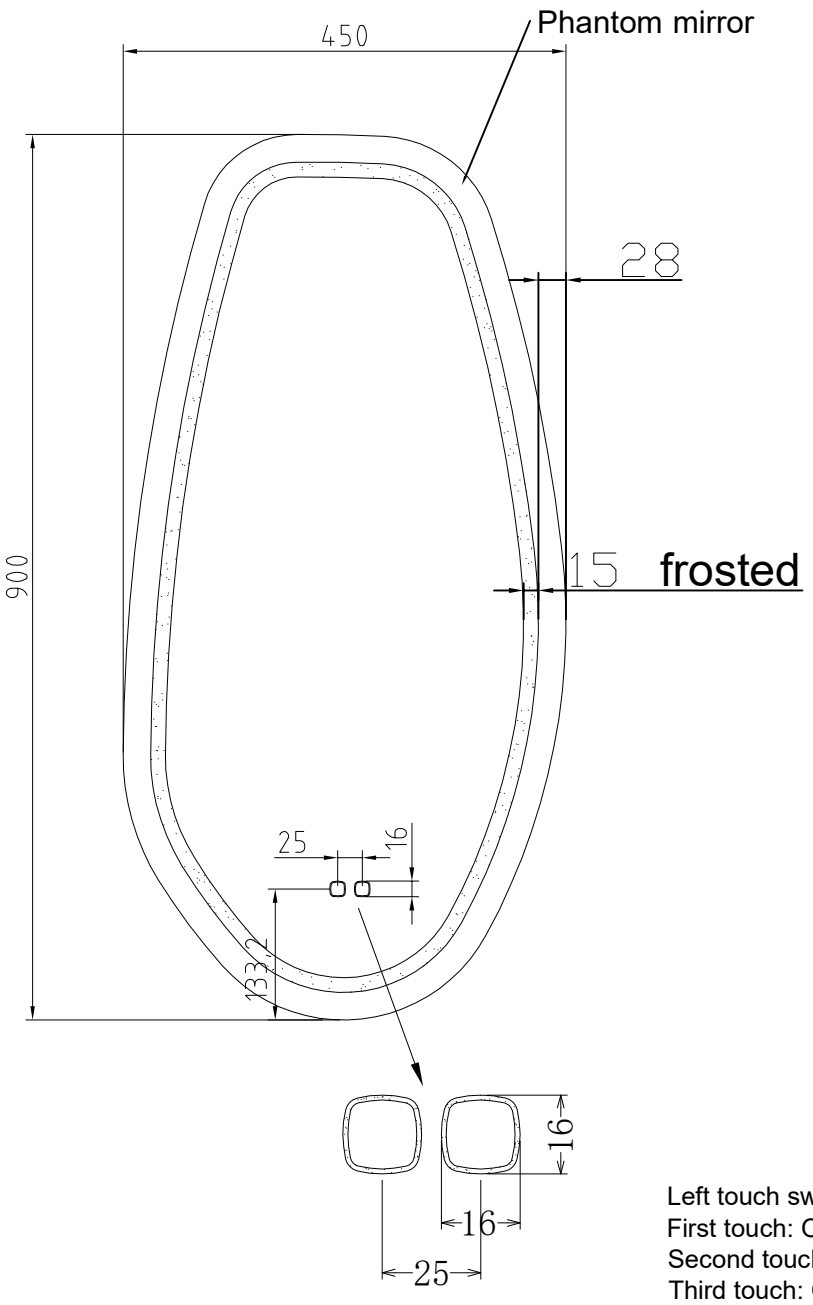

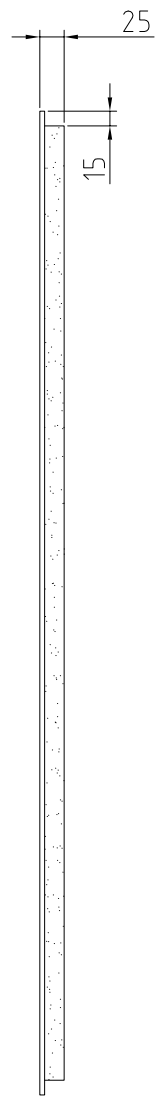

Left touch switch:
First touch: ON mode for direct front light + heating
Second touch: ON mode for indirect ambient light + heating
Third touch: ON mode for both direct and indirect light + heating
Fourth touch: OFF mode for both direct and indirect light + heating
Dimming function: when lights are ON, hold down the left touch switch to activate the dimming function

Right touch switch:
Color change: when lights are ON, hold down the right touch switch to activate the color change function

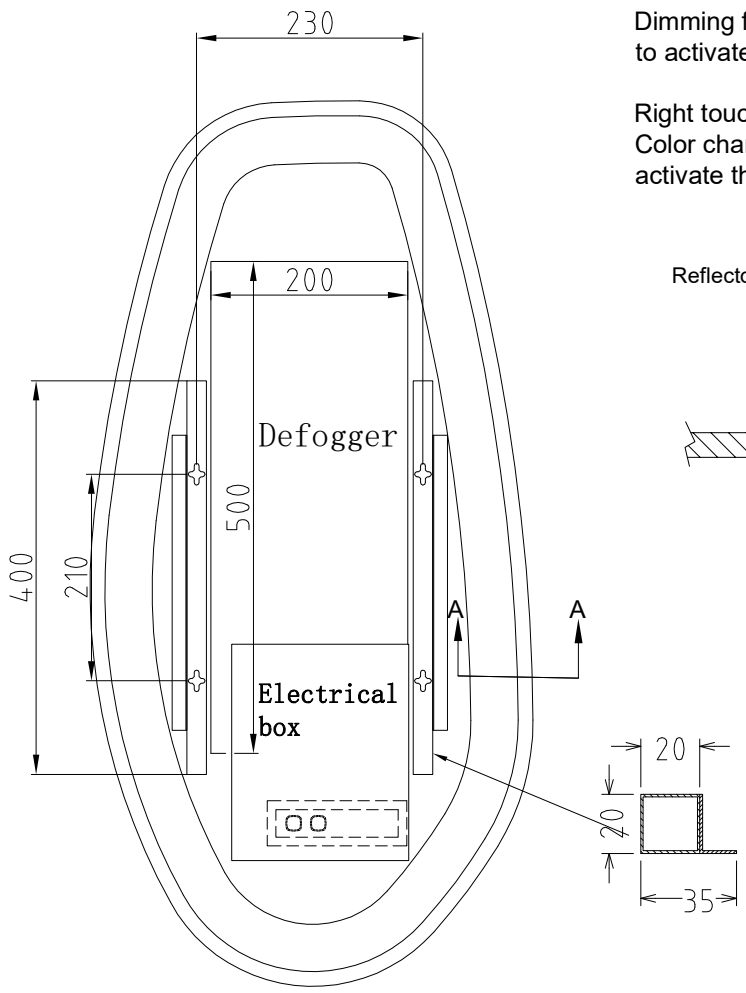

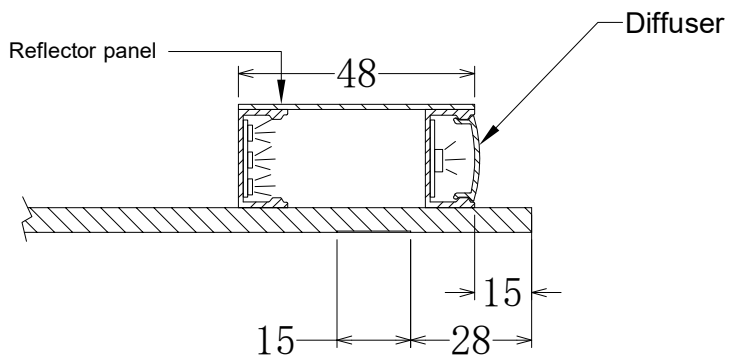

LED holder+soft silicone diffuser

Section A-A

MODEL 5-H900
Size：W450xH900mm
Front LED Light：2835/24V/360pcs/2700~6400K/54W
LED Length:1.9m
Backlit LED Ligh: 2835/24V/120PCS/20W/2700K~6400K
LED Length:2.1m
Heating film: 200*500mm
CE IP44